MCRPMD series

MAGNETICALLY COUPLED **RODLESS CYLINDER**

mindman

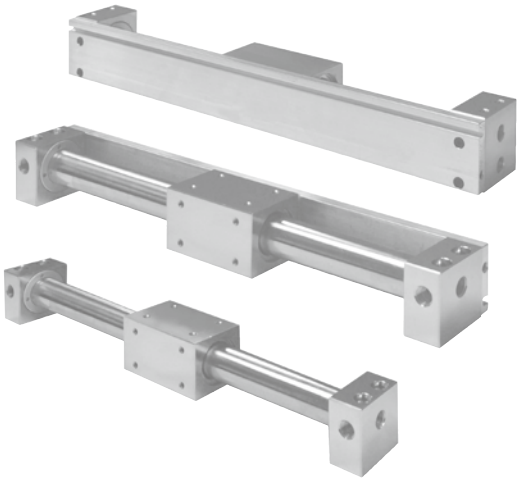

Features

- 50 % space saving.
- Magnetic transit design. Magnetic force transits the movement with piston side magnet and slider magnet.
- Stainless tube, light weighted and durable.

Specification

Model	MCRPMD				
Acting type	Double acting				
Tube I.D. (mm)	10	15	20	25	32
Port size	M5×0.8		Rc1/8		
Medium	Air				
Max. operating pressure	0.7 MPa				
Min. operating pressure	0.18 MPa				
Proof pressure	1 MPa				
Ambient temperature	+5°C ~ +60°C				
Lubricator	Without lubrication				
Available speed range	Standard grease: 100~500 mm/sec				
	Slow motion grease: 60~100 mm/sec (*1)				
Holding force	53.9 N	137 N	231 N	363 N	588 N
Sensor switch (*2)	RDF	RCE, RCE1			

*1. Between the speed range limit the actuator stroke must not exceed to 2m/minute.
*2. RCE, RCE1, RDF specifications, please refer to page 8-11, 12, 18.
*3. Input air-port needs at speed control valves to control speed.

Table for standard stroke

Type	Tube I.D.	Stroke (mm)	Max. stroke
Standard **G** type	ø10	100, 150, 200, 250, 300, 400, 500	500
	ø15		700
	ø20 ø25 ø32	100, 150, 200, 250, 300, 350, 400 450, 500, 600, 700, 800	1000
N type	ø10	100, 150, 200, 250, 300, 400, 500	500
	ø15		1000
	ø20	100, 150, 200, 250, 300, 350, 400	1500
	ø32	450, 500, 600, 700, 800	2000

* Minimum stroke unit 1mm.

Order example

MCRPMD — G — 20 — 100 — A S — G

- MODEL
- TYPE

Code		Port location	Magnets & switch rail
Blank		Standard	○
N		Standard	×
G	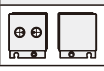	Centralized piping	○

- TUBE I.D.
- STROKE
- GREASE LUBRICATION
  Blank: Standard
  S: Slow motion grease
- Blank: Cushion pad (Unadjustable)
  A: Cushion air (Adjustable)
  (Only for ø15~ø32 and standard piping)
- PORT THREAD
  Blank: M5×0.8
  (for ø10, 15)
  Blank: Rc thread
  G: G thread
  NPT: NPT thread
  (for ø20~ø32)

Maximum allowable directly load

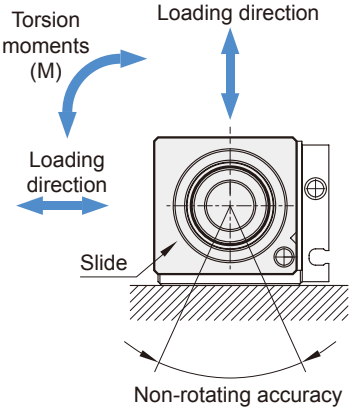

Tube I.D.	Max. allowable load (kg)	Non-rotating accuracy	Max. torsion moments	Non-rotating accuracy Allowable stroke
ø10	0.4	5°	0.05 N.m	100 mm
ø15	0.9	5°	0.18 N.m	200 mm
ø20	1.1	4°	0.23 N.m	300 mm
ø25	1.1	4°	0.40 N.m	300 mm
ø32	1.5	4°	0.12 N.m	400 mm

* Non-rotating angle accuracy will be reduced by distortion due to longer stroke and switch rail.

Cylinder weight

Unit: g

Model	Basic weight **MCRPMD**	Stroke 100 mm **MCRPMD**
Tube I.D.		
ø10	163	67
ø15	302	80
ø20	520	102
ø25	712	115
ø32	1235	150

Cushion pad Unadjustable

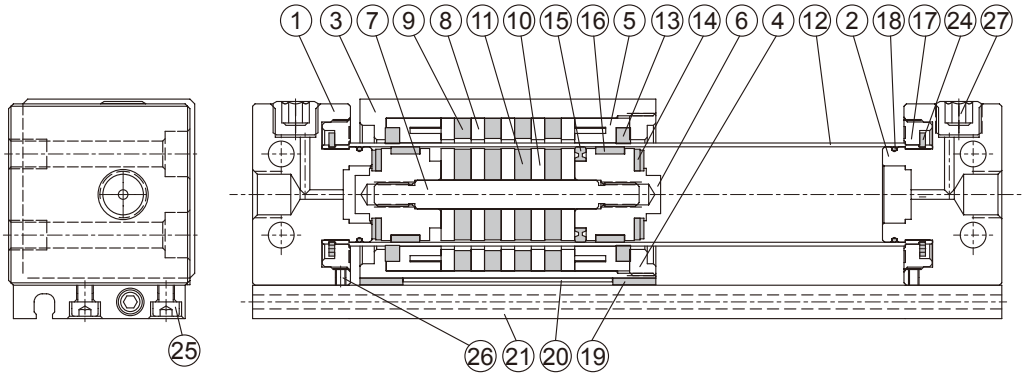

Cushion air Adjustable

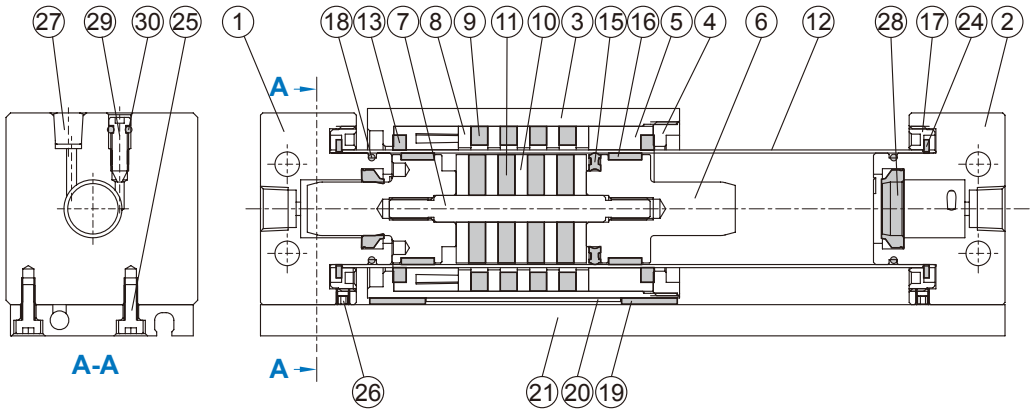

Material

No.	Part name	Material
1	Cover A	Aluminum alloy
2	Cover B	Aluminum alloy
3	Slider body	Aluminum alloy
4	Body cover	Aluminum alloy
5	Body wear ring	POM
6	Piston	Aluminum alloy
7	Shaft	Stainless steel
8	Slider side yoke	Carbon steel
9	Slider side magnet	Magnet material
10	Piston side yoke	Carbon steel
11	Piston side magnet	Magnet material
12	Tube	Stainless steel
13	Lub-retainer	Special resin
14	Cushion	NBR
15	Piston seal	NBR

No.	Part name	Material
16	Wear ring	POM
17	Tube fixed nut	Aluminum alloy
18	O-ring	NBR
19	Wear ring	POM
20	Magnetic shielding plate	Carbon steel
21	Switch rail	Aluminum alloy
22	Magnet	Magnet material
23	Spring	Stainless steel
24	Snap ring	Spring steel
25	Bolt	SCM
26	Screw	SCM
27	Seal screw	Carbon steel
28	Cushion packing	NBR
29	Needle valve	Stainless steel
30	Needle valve packing	NBR

Centralized piping

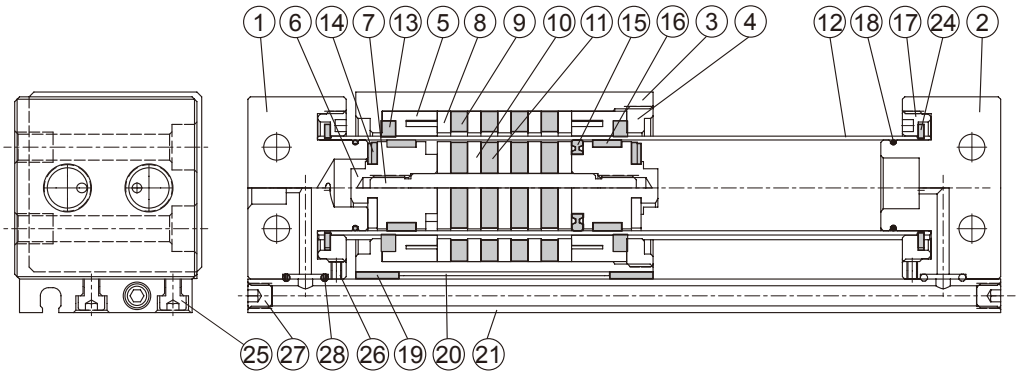

Material

No.	Part name	Material
1	Cover A	Aluminum alloy
2	Cover B	Aluminum alloy
3	Slider body	Aluminum alloy
4	Body cover	Aluminum alloy
5	Body wear ring	POM
6	Piston	Aluminum alloy
7	Shaft	Stainless steel
8	Slider side yoke	Carbon steel
9	Slider side magnet	Magnet material
10	Piston side yoke	Carbon steel
11	Piston side magnet	Magnet material
12	Tube	Stainless steel
13	Lub-retainer	Special resin
14	Cushion	NBR
15	Piston seal	NBR
16	Wear ring	POM
17	Tube fixed nut	Aluminum alloy
18	O-ring	NBR
19	Wear ring	POM
20	Magnetic shielding plate	Carbon steel
21	Switch rail	Aluminum alloy
22	Magnet	Magnet material
23	Spring	Stainless steel
24	Snap ring	Spring steel
25	Bolt	SCM
26	Screw	SCM
27	Screw	SCM
28	O-ring	NBR

MCRPMD Dimensions ø10~ø32

MAGNETICALLY COUPLED **RODLESS CYLINDER**

mindman

Both sides piping

Adjustable cushion

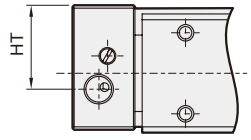

Code / Tube I.D	HT
15	10
20	24
25	29
32	35

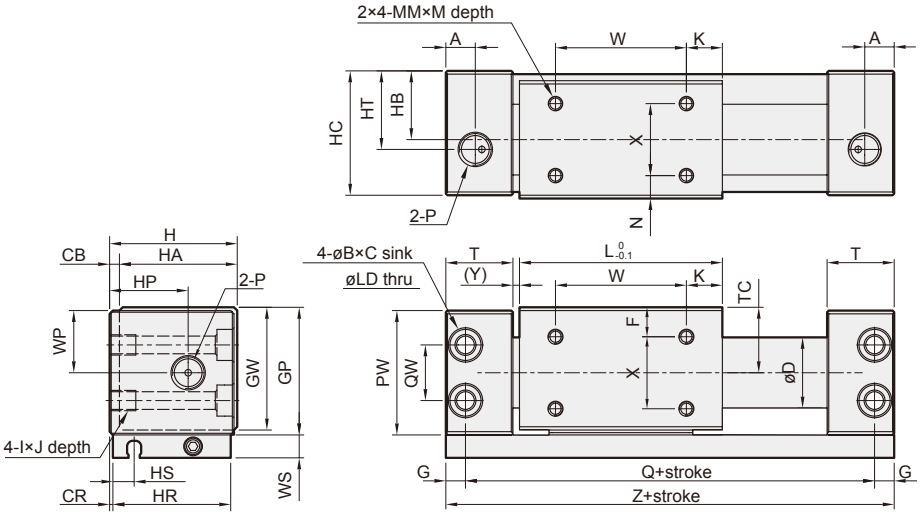

Code / Tube I.D	A	B	C	CB	CR	D	F	G	GP	GW	H	HA	HB	HC	HP	HR	HS	HT	I	J	K	L	LD	M
10	8.5	6.5	3.2	2	0.5	12	6.5	4	27	25.5	26	24	13	25	14	24	4.5	14	M4×0.7	6	9	38	3.3	4.5
15	9.5	8	4.2	2	0.5	16.6	8	5	33	31.5	32	30	17	31	17	30	4.9	17	M5×0.8	7	14	53	4.3	5
20	9	9.5	5.2	3	1	21.6	9	6	39	37.5	39	36	21	38	24	36	6.5	24	M6×1.0	8	11	62	5.4	5
25	9	9.5	5.2	3	1	26.4	8.5	6	44	42.5	44	41	23.5	43	23.5	41	6.5	23.5	M6×1.0	8	15	70	5.4	6
32	10.5	11	6.5	3	1.5	33.6	10.5	7	55	53.5	55	52	29	54	29	51	6	29	M8×1.25	10	13	76	6.8	7

Code / Tube I.D	MM	N	P	PW	Q	QW	T	TC	W	WP	WS	X	Y	Z
10	M3×0.5	4.5	M5×0.8	26	68	14	17.5	14	20	13	7	15	1.5	76
15	M4×0.7	6	M5×0.8	32	84	18	19	17	25	16	7	18	1.5	94
20	M4×0.7	7	Rc1/8	38	95	17	20.5	20	40	19	7	22	2	107
25	M5×0.8	6.5	Rc1/8	43	105	20	21.5	22.5	40	21.5	7	28	2	117
32	M6×1.0	8.5	Rc1/8	54	116	26	24	28	50	27	7	35	3	130

Centralized piping type

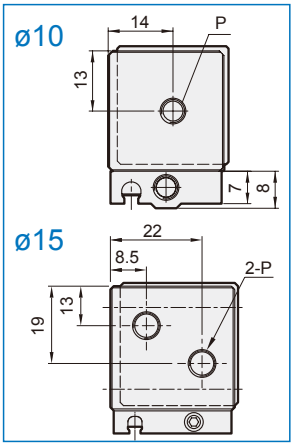

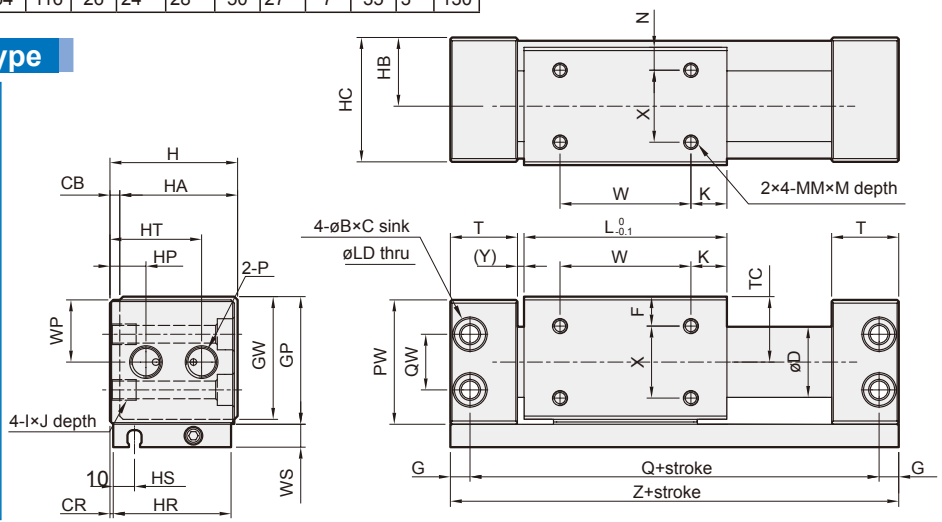

Code / Tube I.D	B	C	CB	CR	D	F	G	GP	GW	H	HA	HB	HC	HP	HR	HS	HT	I	J	K	L	LD	M
10	6.5	3.2	2	0.5	12	6.5	4	27	25.5	26	24	14	25	—	24	4.5	—	M4×0.7	6	9	38	3.3	4.5
15	8	4.2	2	0.5	16.6	8	5	33	31.5	32	30	17	31	—	30	4.9	—	M5×0.8	7	14	53	4.3	5
20	9.5	5.2	3	1	21.6	9	6	39	37.5	39	36	21	38	24	36	6.5	24	M6×1.0	8	11	62	5.4	5
25	9.5	5.2	3	1	26.4	8.5	6	44	42.5	44	41	23.5	43	23.5	41	6.5	23.5	M6×1.0	8	15	70	5.4	6
32	11	6.5	3	1.5	33.6	10.5	7	55	53.5	55	52	29	54	20	51	6	40	M8×1.25	10	13	76	6.8	7

Code / Tube I.D	MM	N	P	PW	Q	QW	T	TC	W	WP	WS	X	Y	Z
10	M3×0.5	4.5	M5×0.8	26	68	14	17.5	14	20	—	7	15	1.5	76
15	M4×0.7	6	M5×0.8	32	84	18	19	17	25	—	7	18	1.5	94
20	M4×0.7	7	Rc1/8	38	95	17	20.5	20	40	19	7	22	2	107
25	M5×0.8	6.5	Rc1/8	43	105	20	21.5	22.5	40	21.5	7	28	2	117
32	M6×1.0	8.5	Rc1/8	54	116	26	24	28	50	27	7	35	3	130