GFC

Symbol

No reflux valve is attached

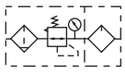

Reflux valve is attached

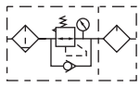

Product feature

1. Quick and reliable mounting clamps makes it convenient to install and use.
2. The performance of pressure adjustment is reliable with high precision.
3. The efficiency of eliminating moisture and solid grain is high.
4. Three drain types are available: manual drain, semi-auto drain and automatic drain.

Specification

Model		GFC200-06	GFC200-08	GFC300-08	GFC300-10	GFC300-15	GFC400-10	GFC400-15	GFC600-20	GFC600-25
Fluid		Air								
Port size		1/8"	1/4"	1/4"	3/8"	1/2"	3/8"	1/2"	3/4"	1"
Filtering grade		40 μ m or 5 μ m								
Pressure range		Semi-auto and automatic drain:0.15~0.9MPa(20~130psi);Manual drain:0.05~0.9MPa(7~130psi)								
Max. pressure		1.0MPa(145psi)								
Proof pressure		1.5MPa(215psi)								
Temperature range		−20~70℃								
Capacity of drain bowl		10CC		40CC			80CC		230CC	
Capacity of oil bowl		25CC		75CC			160CC		380CC	
Recommended lubricant		ISO VG 32 or equivalent								
Weight		430g		980g			1950g		4320g	
Constitute	Filter-Regulator	GFR200-06	GFR200-08	GFR300-08	GFR300-10	GFR300-15	GFR400-10	GFR400-15	GFR600-20	GFR600-25
	Lubricator	GL200-06	GL200-08	GL300-08	GL300-10	GL300-15	GL400-10	GL400-15	GL600-20	GL600-25

Ordering code

GFC200 08 M L □ F 1 W □ K

Model

GFC200: G200 Series FR.L unit
GFC300: G300 Series FR.L unit
GFC400: G400 Series FR.L unit
GFC600: G600 Series FR.L unit

Port size

Model	Port size
GFC200	06: 1/8"
	08: 1/4"
GFC300	08: 1/4"
	10: 3/8"
	15: 1/2"
GFC400	10: 3/8"
	15: 1/2"
GFC600	20: 3/4"
	25: 1"

Drain type

Drain type	Adaptable product's series
Blank: Semi-auto drain	GFC200,GFC300
M: Manual drain	GFC400,GFC600
A: Automatic drain	GFC300, GFC400, GFC600

Type code

Blank: Standard
L: Lower pressure ①

Pressure gauge

Blank: Pressure gauge
N: No pressure gauge

Pressure gauge shape

F: Square
C: Circular

Scale

1: MPa
2: psi
3: bar

Filtering grade

Blank: 40 μ m
W: 5 μ m

Thread type

Blank: PT
T: NPT
G: G

Code of reflux valve ②

Blank: No reverse flow valve is attached
K: Reverse flow valve is attached

① The maximum work pressure of lower pressure type is 0.4MPa(58psi). ② Please refer to page 144 for details of reflux valve.

Inner structure

GFC200

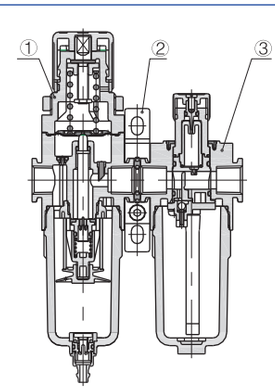

GFC600

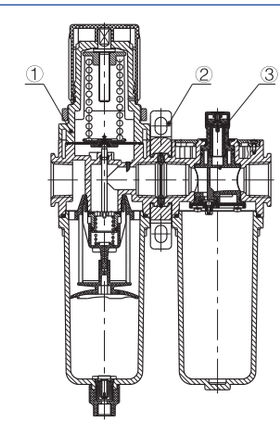

No.	①	②	③
Item	G series filter-regulator	Bracket	G series lubricator

Pressure and feature of flow

Pressure chart

Applicable type: GFC200

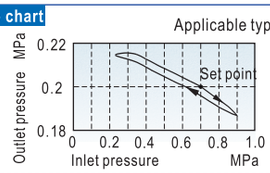

Applicable type: GFC300

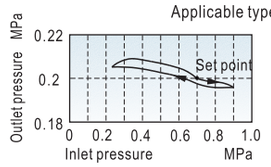

Applicable type: GFC400

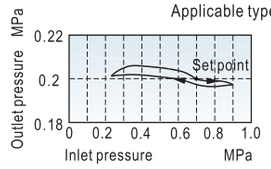

Applicable type: GFC600

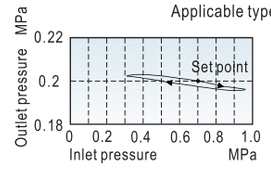

Flow chart

Applicable type: GFC200
Inlet pressure: 0.7MPa

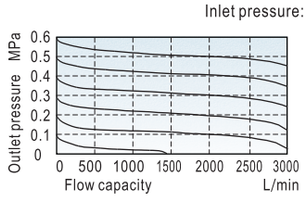

Applicable type: GFC300
Inlet pressure: 0.7MPa

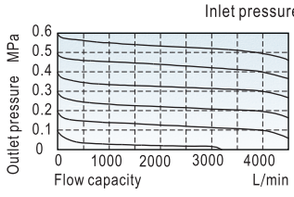

Applicable type: GFC400
Inlet pressure: 0.7MPa

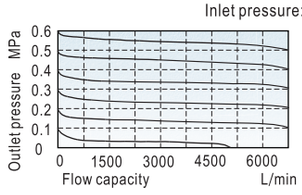

Applicable type: GFC600
Inlet pressure: 0.7MPa

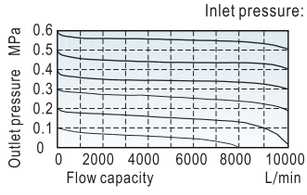

Dimensions

GFC200

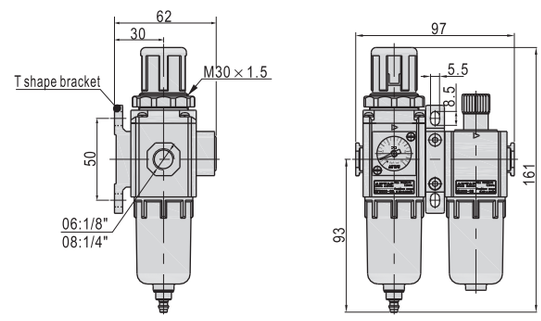

GFC300/GFC400

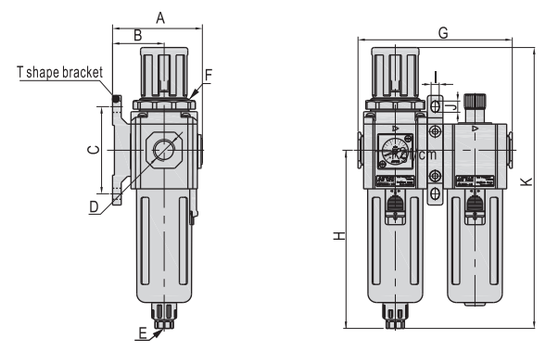

Model\Item	A	B	C	D	E	F	G	H	I	J	K
GFC300-08	72	41.5	70	1/4"	1/8"	M40x1.5	124	143	6.5	9	225.5
GFC300-10	72	41.5	70	3/8"	1/8"	M40x1.5	124	143	6.5	9	225.5
GFC300-15	72	41.5	70	1/2"	1/8"	M40x1.5	124	143	6.5	9	225.5
GFC400-10	89	50	80	3/8"	1/4"	M55x2.0	164	166.5	8.6	12	270.5
GFC400-15	89	50	80	1/2"	1/4"	M55x2.0	164	166.5	8.6	12	270.5

GFC600

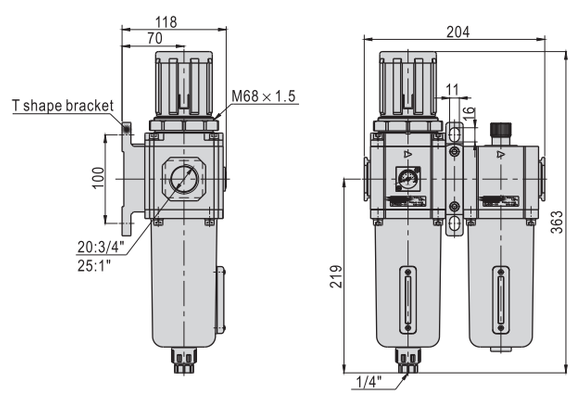

GFC

GFR Series

GFR

Symbol

No reflux valve is attached

Reflux valve is attached

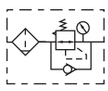

Product feature

1. Embedded square pressure gauge is used to save installation space. (External circular pressure gauge is also optional).
2. The pressed-in self-locking mechanism can prevent the abnormal movement of the set pressure caused by external interfere.
3. Balanced design is adopted for the pressure adjustment mechanism.
4. In addition to standard type, lower pressure type is optional (The highest adjustable pressure is 0.4MPa).
5. Unique diversion structure spins the air flowing through to effectively sparate the liquid from the air and reliabily filter the solid grain.
6. The filtering grade includes 5 μ m and 40 μ m (optional).
7. Three drain types are available: manual drain, semi-auto drain and automatic drain.
8. The bracket can be selected for installation.

Specification

Model	GFR200-06	GFR200-08	GFR300-08	GFR300-10	GFR300-15	GFR400-10	GFR400-15	GFR600-20	GFR600-25
Fluid	Air								
Port size	1/8"	1/4"	1/4"	3/8"	1/2"	3/8"	1/2"	3/4"	1"
Filtering grade	40 μ m or 5 μ m								
Pressure range	Semi-auto and automatic drain:0.15~0.9MPa(20~130psi);Manual drain:0.05~0.9MPa(7~130psi)								
Max. pressure	1.0MPa(145psi)								
Proof pressure	1.5MPa(215psi)								
Temperature range	−20~70℃								
Capacity of drain bowl	10CC		40CC				80CC		230CC
Weight	220g		500g				1030g		2400g

Ordering code

GFR200 08 M L □ □ F 1 W □ K

Model

GFR200: G200 Series filter-regulator
GFR300: G300 Series filter-regulator
GFR400: G400 Series filter-regulator
GFR600: G600 Series filter-regulator

Port size

Model	Port size
GC200	06: 1/8"
	08: 1/4"
GC300	08: 1/4"
	10: 3/8"
	15: 1/2"
GC400	10: 3/8"
	15: 1/2"
GC600	20: 3/4"
	25: 1"

Drain type

Drain type	Adaptable product's series
Blank: Semi-auto drain	GFR200, GFR300
M: Manual drain	GFR400, GFR600
A: Automatic drain	GFR300, GFR400, GFR600

Type code

Blank: Standard
L: Lower pressure ①

Accessories

Blank: Bracket
J: No bracket

Pressure gauge

Blank: Pressure gauge
N: No pressure gauge

Pressure gauge shape

F: Square
C: Circular

Scale

1: MPa
2: psi
3: bar

Filtering grade

Blank: 40 μ m
W: 5 μ m

Thread type

Blank: PT
T: NPT
G: G

Code of reflux valve ②

Blank: No reverse flow valve is attached
K: Reverse flow valve is attached

① The maximum work pressure of lower pressure type is 0.4MPa(58psi). ② Please refer to page 144 for details of reflux valve.

Inner structure and material of major parts

GFR200

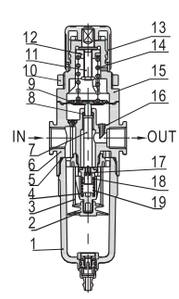

Semi-Auto drain

GFR600

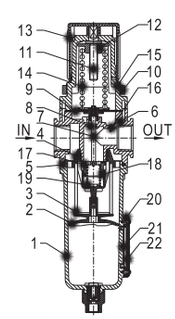

Semi-Auto drain

No.	Item	Material	
1	Drain bowl	Aluminum alloy(GFR600)\PC(others)	
2	Umbrella baffle	High viscosity POM	
3	Filter core	GFR600	Agglomerated by brass grain
		others 40 μ m	Agglomerated by brass grain
		others 5 μ m	Makrolon fiber
4	Air guider	High viscosity POM	
5	O-ring	NBR	
6	Body of filter-regulator	Aluminum alloy	
7	Adjusting spool	Brass (GFR600)\POM(others)	
8	O-ring	NBR	
9	Diaphragm	SUS304 & Rubber	
10	Fixation ring cap	Aluminum alloy(GFR600)\POM(others)	
11	Adjusting spindle	Steel	
12	Regulator nut	Steel	
13	Pressure knob	POM	
14	Spring	SWC	
15	Adjusting seat	Aluminum alloy(GFR600)\POM(others)	
16	Feedback tube	POM	
17	Adjusting plug	Brass & Rubber	
18	O-ring	NBR	
19	Spring	SUS304	
20	Liquid meter cover	SPCC	
21	Liquid meter seal	VITON	
22	Liquid meter inside	PC	

Pressure and feature of flow

Pressure chart

Applicable type: GFR200

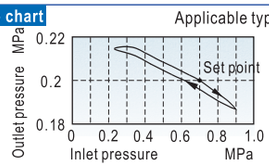

Applicable type: GFR300

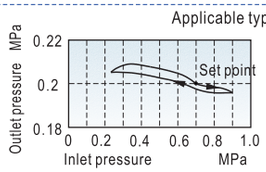

Applicable type: GFR400

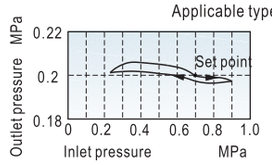

Applicable type: GFR600

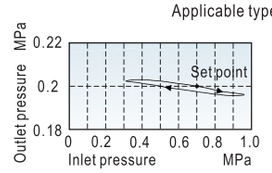

Flow chart

Applicable type: GFR200
Inlet pressure: 0.7MPa

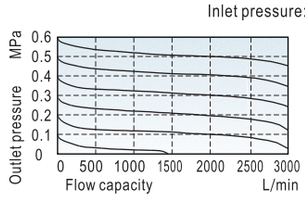

Applicable type: GFR300
Inlet pressure: 0.7MPa

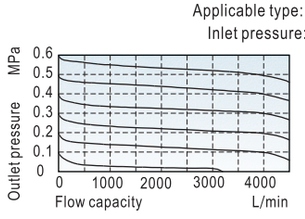

Applicable type: GFR400
Inlet pressure: 0.7MPa

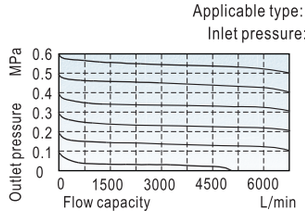

Applicable type: GFR600
Inlet pressure: 0.7MPa

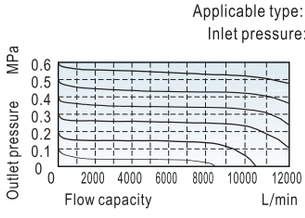

Selection of drain mode

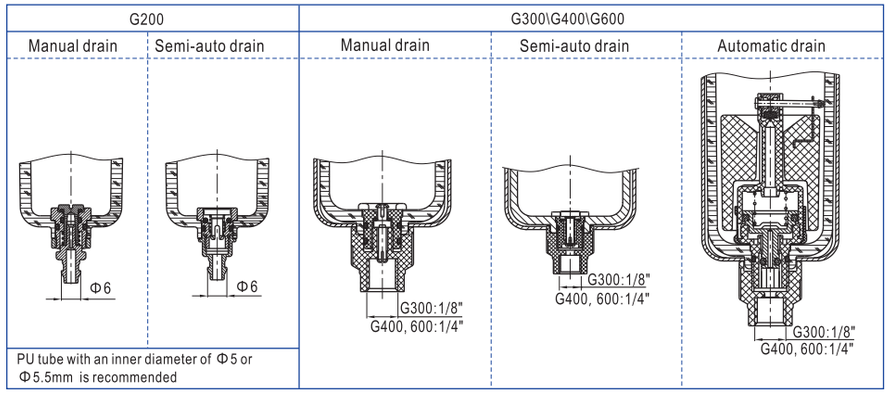

Dimensions

GFR200

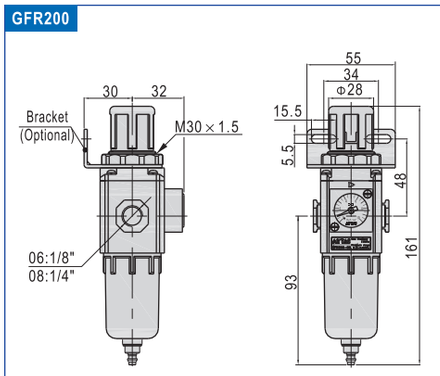

GFR600

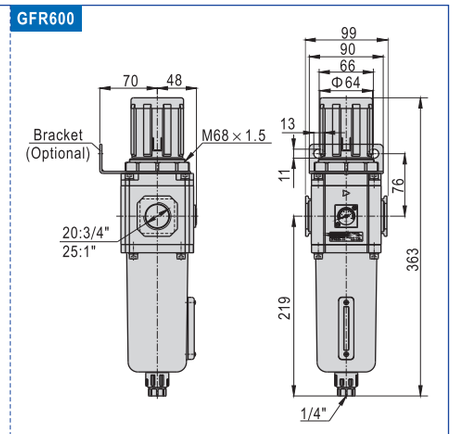

GFR300/GFR400

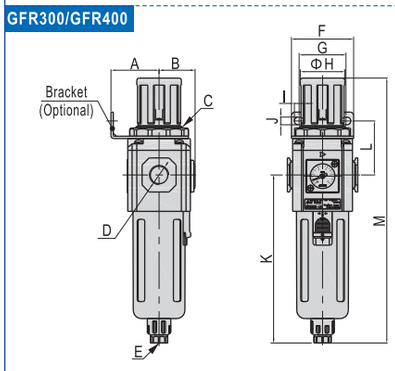

Model\Item	A	B	C	D	E	F
GFR300-08	41	31	M40x1.5	1/4"	1/8"	53
GFR300-10	41	31	M40x1.5	3/8"	1/8"	53
GFR300-15	41	31	M40x1.5	1/2"	1/8"	53
GFR400-10	50	40	M55x2.0	3/8	1/4"	72
GFR400-15	50	40	M55x2.0	1/2"	1/4"	72

Model\Item	G	H	I	J	K	L	M
GFR300-08	40	38	8	6.5	143	46	225.5
GFR300-10	40	38	8	6.5	143	46	225.5
GFR300-15	40	38	8	6.5	143	46	225.5
GFR400-10	52	52	11	8.5	166.5	53	270.5
GFR400-15	52	52	11	8.5	166.5	53	270.5